Machine Dimensions 機械尺寸圖

CVS-1500

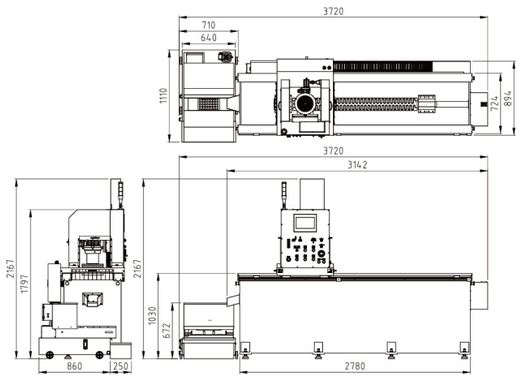

CVS-2500

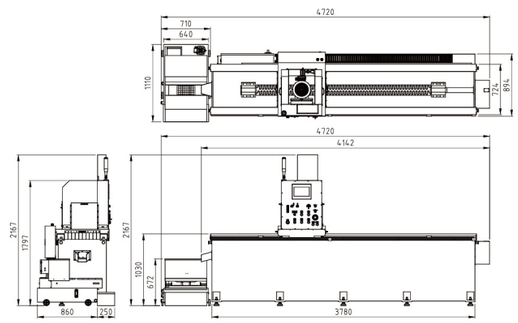

CVS-3500

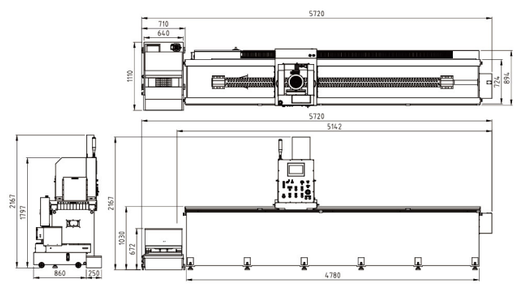

EYAN

易研精密機械有限公司

EYAN MACHINE TOOLS CO., LTD.

台中市南屯區精科七路5號

No.5, Jingke 7th Rd., Nantun Dist., Taichung City 408, Taiwan

Tel:+886-4-2355-3111 Fax:+886-4-2355-2111

E-mail:eyan@eyan.com.tw

eyan@eyan.com

http://www.eyan.com

//www.hsssaw.com

1140218

CVS SERIES

EYAN

CVS-1500/2500/3500 CNC直刀研磨機

CNC Straight Knife Grinding Machine

CNC 直刀研磨機

CNC Straight Knife Grinding Machine

CVS-1500
CVS-2500
CVS-3500

適用於工業機床製造、印刷、塑膠及木工業的合金切削刀具及直刀研磨。
可替換式 SDC 砂輪，適用於硬合金鋼、刀片角度及主要間隙面。
開小刃口及高速鋼刀拋光

Suitable for alloy cutting knives and straight knives grinding in the industrial machine tool manufacturing, printing , plastics and wood industry.
Replaceable SDC grinding wheels for hard alloy steel, blade angle, and main clearance surface.
Small edge honing and polishing of high-speed steel knives

● 研磨產品範例 Grinding Samples

PLC控制系統
PLC Control System

- 觸控螢幕、PLC、伺服馬達均採用日製三菱電機控制架構，提供您可靠的品質
  The touchscreen, PLC, and servo motor are all manufactured by Mitsubishi Electric, ensuring a reliable control structure with top-quality performance.
- 操控畫面採用圖形顯示，操作方便
  The control screen features a graphical interface, making it easy to operate
- 只要進行選擇即可輕鬆完成研磨設定。
  As long as to simply select an option, it will be easily set up the grinding process

Features / 特徵

CNC控制砂輪自動進刀
全新程式設計可粗加工、精加工、無火花研磨
CNC-controlled automatic feed for the grinding wheel
Newly programmed for roughing, finishing, and non-sparking grinding.

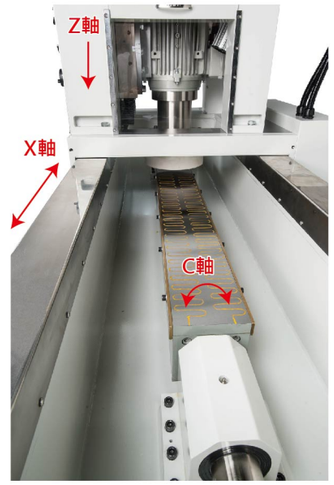

X軸移動使用直線滑軌
磨頭移動更加穩定和精確
Utilizes linear guide for X-axis movement. Spindle movement is more stable and precise.

● 自動旋轉電磁工作台
Automatic rotating electromagnetic table

Specifications / 規格表

Item / 項目	CVS-1500	CVS-2500	CVS-3500
Grinding Length 研磨長度	1500 mm	2500 mm	3500 mm
Grinding Width 研磨寬度	300 mm	300 mm	300 mm
Grinding Precision 研磨精度	0.01 mm	0.01 mm	0.01 mm
Grinding Speed 研磨速度(m/min)	20,000 mm/min	20,000 mm/min	20,000 mm / min
Straight knife with adjustable angle 直刀可調角度	-90 ~ +90	-90 ~ +90	-90 ~ +90
Grinding Wheel Diameter 砂輪外徑	Ø255	Ø255	Ø255
Grinding Wheel Motor 砂輪馬達	10 HP	10 HP	15 HP
Paper Tape Filter motor 紙帶過濾機馬達	1/6 HP	1/6 HP	1/6 HP
Grinding Wheel Speed (50HZ/60HZ) 砂輪轉速	1500 / 1800 rpm	1500 / 1800 rpm	1500 / 1800 rpm
C-Axis Motor	AC SERVO MOTOR 伺服馬達	AC SERVO MOTOR 伺服馬達	AC SERVO MOTOR 伺服馬達
X-Axis Motor	AC SERVO MOTOR 伺服馬達	AC SERVO MOTOR 伺服馬達	AC SERVO MOTOR 伺服馬達
Z-Axis Motor	AC SERVO MOTOR 伺服馬達	AC SERVO MOTOR 伺服馬達	AC SERVO MOTOR 伺服馬達
Power Require 使用總電力	13 KVA	13 KVA	17 KVA
Net Weight / Gross Weight 淨重/毛重	2358kg / 2695kg	3010kg / 3430kg	3660kg / 4150kg
Packaging Size 裝箱尺寸	388*130*250cm	483*130*250cm	588*130*250cm

Standard Accessories / 標準配備

Work Light 工作燈	1 pc個
Grinding Wheel Flanges 砂輪連接盤	1 pc個
Tool Box 工具箱	1 set套
Operating Manual 說明書	1 copy份
Vertical Axis Flat Grinding Wheel 立軸式平面砂輪 Ø255	1 pc片

Optional Accessories / 選購配件

Filter Bag 過濾紙

Vertical Axis Flat Grinding Wheel 立軸式平面砂輪

Paper Tape Filter 紙帶過濾器

◆ All designs, spec. and characteristics shown above are subject to any change without prior notice.
因設計或製造上的需要，如有變更恕不另行通知。